GTM400 Series

400 Amp 1500 Vdc Hermetic Sealed DC Contactor

The GTM400—a world-class, fully bidirectional contactor engineered for today's most demanding applications. Leveraging a proven sealing technology rooted in aerospace military and industrial heritage, the GTM400 delivers exceptional reliability and long-term performance under extreme conditions.

The GTM series combines the best aspects of traditional ceramic and epoxy to metal sealing technologies. The GTM400 design excels in performance with respect to breaking performance, temperature (stress) resistance, integral robustness and short circuit withstand.

The GTM400 design provides reliable switching and circuit protection for high voltage applications up to 1500V and 400A, making them ideal choices for energy storage systems (ESS), high power DC fast charging, heavy vehicles, and other high voltage applications.

Highlights

Safety

- Hermetic seal - no exposed arcing to open air environments
- UL and CE recognitions (Pending)

Usability

- High efficiency DC Coils (dual coil). Ideal for systems that require low coil power consumption
- Upright and side-mounting housing with custom harnesses if required
- AUX Switch (Normally open or Normally Closed)

Performance

- Best in class break performance for improved safety
- Advanced arc suppression for increased reliability and longevity
- Strong short circuit withstand with no rupture or fire risk

Features

- High power - up to 1500V / 400A
- Fully bidirectional switching
- Unique GTMS (glass-to-metal seal) technology

Applications

GTM400 Series Technical Specifications

Mounting
M6 or ¼-20

Case Material
Crastin FR684NH1 NC010 (25% glass filled, flame retarded, non halogenated, PBT)

Power Connection
M6 x 1.0 tapped hole.
Torque 10Nm [90in-lb] max

Coil Wire
Silicone, 20 AWG, UL: VW-1

Power Contacts

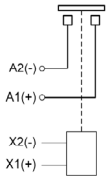

		Units	Data
Rated Voltage		V	1500
Contact Arrangement	Main	Form X	SPST-NO
	Auxilary (2A , 24 VDC)[9]	Form A or B	SPST
Mechanical Life		Cycles	300,000
Contact Resistance[1]	Max	mohms	0.3
Operate Time[2]	Max	ms	40
Release Time, Max		ms	12
Insulation Resistance[3]		Mohms	100
Dielectric At Sea Level		VRMS	5,375
Shock, 1/2 Sine, 11ms		G	35
Vibration, Sinusoidal (500-2000 Hz Peak)		G	10
Ambient Temp Range	Operating[4]	˚C	-40 to +85
	Storage	˚C	-70 to +125
Weight, Typical		Kg (Lb)	<0.91 (2.0)
Environmental Seal at the switch level, soldered leads are exposed		Exceeds IP67 & IP69K	
Salt Fog		MIL-STD-810	

Electrical Specifications

Electrical Life (Resistive) with	1500V, 100A, 6K Cycles 1500V, 675A, 1 break only 1100V, 125A, 10k cycles 1000V, 900A, 10 break only Additional breaking capabilities to be added after testing is completed.
Current Withstand	400A, Continuous
Short circuit withstand current	8kA 5ms and passed at 10kA 1ms no smoke or fire.

COIL RATINGS AT 25˚C

Coil P/N Designation	B	C	F
Coil Voltage, Max	16 V	32 V	60 V
Nominal Coil Voltage	12V	24V	48V
Pick-Up Voltage, Max[5, 7]	9 V	18V	40 V
Drop-Out Voltage	6.5 V max.	15 V max	15 V max
Pick-Up Current, Max (75 ms)[6, 7]	4.3 A	1.6 A	0.98 A
Coil Current[6]	0.24 A	0.09 A	0.044 A
Coil Power[6]	2.9 W	2.1 W	2.1 W
Internal Coil Suppression			
Coil Back EMF	55 V	55 V	125 V
Transients, Max (13 ms)	±50 V	±50 V	±75 V

GTM400 Series Technical Specifications

[mm] in
Aux wire leads: +1.85 in relative to coil leads.
All leads length tolerance: +/-0.4 in.

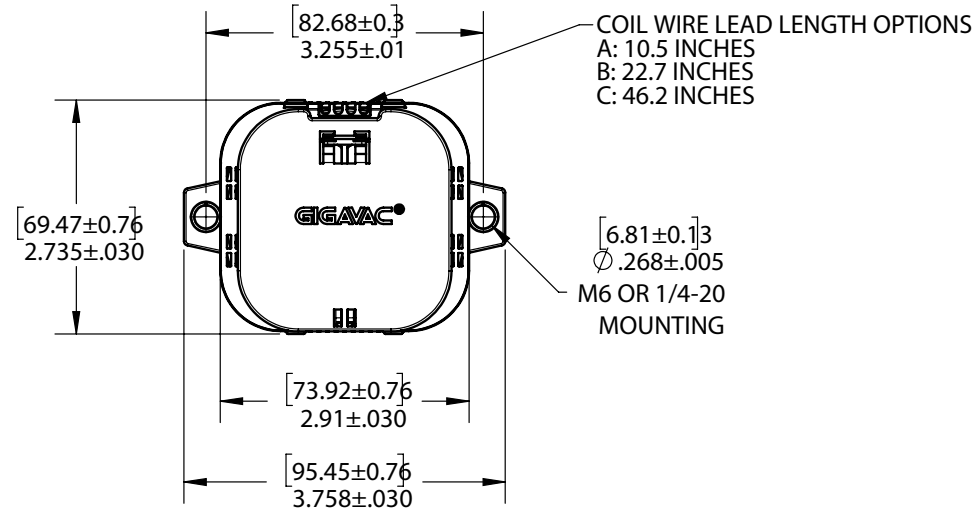

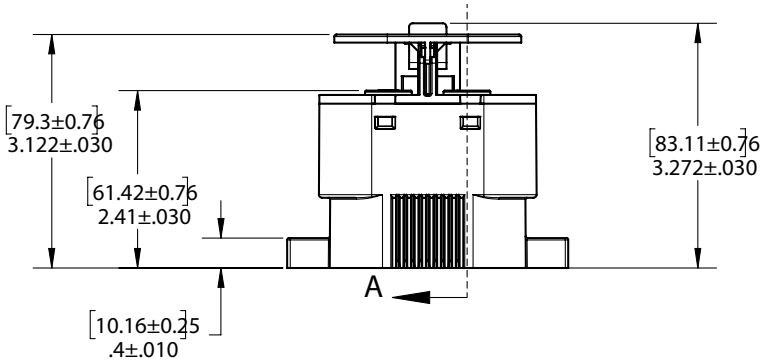

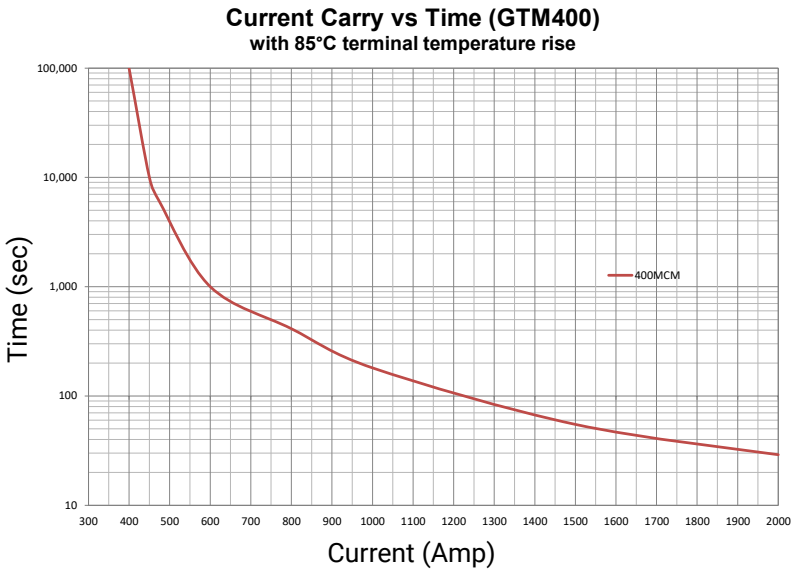

GTM400 Series Technical Specifications

Ordering Options

Example: GTM401BAB

Family
GTM400

Mounting
1: Bottom Mounting
2: Side Mounting

Coil Voltage
B: 12 Vdc, Internal Coil Suppression
C: 24 Vdc, Internal Coil Suppression

Coil Wire Lead Length Options
(Red = positive, Black = negative)
A: Flying leads 10.5 (266.7 mm)
B: Flying leads 22.7 (576.5 mm)
C: Flying leads 46.2 (1173.4mm)

Auxiliary Contact[8]
(Blue and White)
X: None
B: SPST, Normally Open
C: SPST, Normally Closed

General Notes

1. Contact resistance measured at currents higher than 100A at 30seconds.
2. Operation time is measured at 25°C and includes maximum 7ms bounce.
3. Insulation resistance is 50 Mohms after life.
4. Contactor can operate up to 125°C in special cases, terminal temperature needs to be confirmed in application (< 150 C) - contact Sensata for details.
5. Contactor has two coils. Both are used for pick-up, and then in approximately 75 milliseconds, one coil is electronically removed from the coil drive circuit. The remaining coil supplies low continuous hold power sufficient for the contactor to meet all of its specified performance specifications. This provides low coil power without PWM electronics that can cause EMI emissions and/or cross-talk on control power.
6. Contactor is operated by a coil that changes resistance with temperature. Since pick-up current, coil current and coil power are specified at nominal voltage, they will be lower than indicated at temperatures above 25°C and higher than indicated at temperatures below 25°C. Similarly, pick-up and drop-out voltages will be higher than indicated at temperatures above 25°C and lower than indicated at temperatures below 25°C.
7. For pick-up testing of contactors with dual coils, the voltage can not be ramped up slowly, but must be applied instantly to at least the maximum pick-up voltage. Otherwise, the contactor will not pick-up.
8. Limit make current to avoid contact welding. Contact Sensata regarding DC Power Switching Cycle Life for part numbers that include auxiliary contacts.
9. Auxiliary contact rating is 2A, 24Vdc Resistive load, 100,000 cycles. Minimum current is 10mA, 5V. The auxiliary contact is mechanically linked to the main power contact*.

- Contactors feature internal transorb for coil suppression. No external diodes should be added across the coil. The use of additional external coil suppression can slow the release time and invalidate the life cycle ratings, or can cause the contactor not to be able to interrupt the maximum current specified. If lower coil back EMF is required, please contact Sensata for assistance.
- Applications with capacitors will require a pre-charge circuit.
- Electrical life rating is based on resistive load with 27μH maximum inductance in circuit. Because your application may be different, we suggest you test the contactor in your circuit to verify life is as required.
- End of life is defined as when the dielectric, insulation resistance or contact resistance fails the specifications listed.
- Contact Sensata regarding DC Power Switching Cycle Life for part numbers that include auxiliary contacts.

*Pending confirmation

Datasheets provided by Sensata Technologies, Inc., its subsidiaries and/or affiliates ("Sensata") are solely intended to assist third parties ("Buyers") who are developing systems that incorporate Sensata products (also referred to herein as "components"). Buyer understands and agrees that Buyer remains responsible for using its independent analysis, valuation, and judgment in designing Buyer's systems and products. Sensata datasheets have been created using standard laboratory conditions and engineering practices. Sensata has not conducted any testing other than that specifically described in the published documentation for a particular datasheet. Sensata may make corrections, enhancements, improvements, and other changes to its datasheets or components without notice.
Buyers are authorized to use Sensata datasheets with the Sensata component(s) identified in each particular datasheet. HOWEVER, NO OTHER LICENSE, EXPRESS OR IMPLIED, BY ESTOPPEL OR OTHERWISE TO ANY OTHER SENSATA INTELLECTUAL PROPERTY RIGHT, AND NO LICENSE TO ANY THIRD PARTY TECHNOLOGY OR INTELLECTUAL PROPERTY RIGHT, IS GRANTED HEREIN. SENSATA DATASHEETS ARE PROVIDED "AS IS". SENSATA MAKES NO WARRANTIES OR REPRESENTATIONS WITH REGARD TO THE DATASHEETS OR USE OF THE DATASHEETS, EXPRESS, IMPLIED, OR STATUTORY, INCLUDING ACCURACY OR COMPLETENESS. SENSATA DISCLAIMS ANY WARRANTY OF TITLE AND ANY IMPLIED WARRANTIES OF MERCHANTABILITY, FITNESS FOR A PARTICULAR PURPOSE, QUIET ENJOYMENT, QUIET POSSESSION, AND NON-INFRINGEMENT OF ANY THIRD PARTY INTELLECTUAL PROPERTY RIGHTS WITH REGARD TO SENSATA DATASHEETS OR USE THEREOF.
All products are sold subject to Sensata's terms and conditions of sale supplied at www.sensata.com. SENSATA ASSUMES NO LIABILITY FOR APPLICATIONS ASSISTANCE OR THE DESIGN OF BUYERS' PRODUCTS. BUYER ACKNOWLEDGES AND AGREES THAT IT IS SOLELY RESPONSIBLE FOR COMPLIANCE WITH ALL LEGAL, REGULATORY, AND SAFETY-RELATED REQUIREMENTS CONCERNING ITS PRODUCTS, AND ANY USE OF SENSATA COMPONENTS IN ITS APPLICATIONS, NOTWITHSTANDING ANY APPLICATIONS-RELATED INFORMATION OR SUPPORT THAT MAY BE PROVIDED BY SENSATA.
Mailing Address: Sensata Technologies, Inc., 529 Pleasant Street, Attleboro, MA 02703, USA

Regional head offices:
United States of America
Sensata Technologies
Attleboro, MA
Phone: 508-236-3800
E-mail: support@sensata.com

Netherlands
Sensata Technologies
Holland B.V.
Hengelo
Phone: +31 74 357 8000
E-mail: support@sensata.com

China
Sensata Technologies China
Co., Ltd.
Shanghai
Phone: +8621 2306 1500
E-mail:support@sensata.com

Copyright © 2026 Sensata Technologies, Inc.